Data Sheet

Article number: 2301078621
Description: E+G Handwheel
VRTP.125+I-A12

Measures

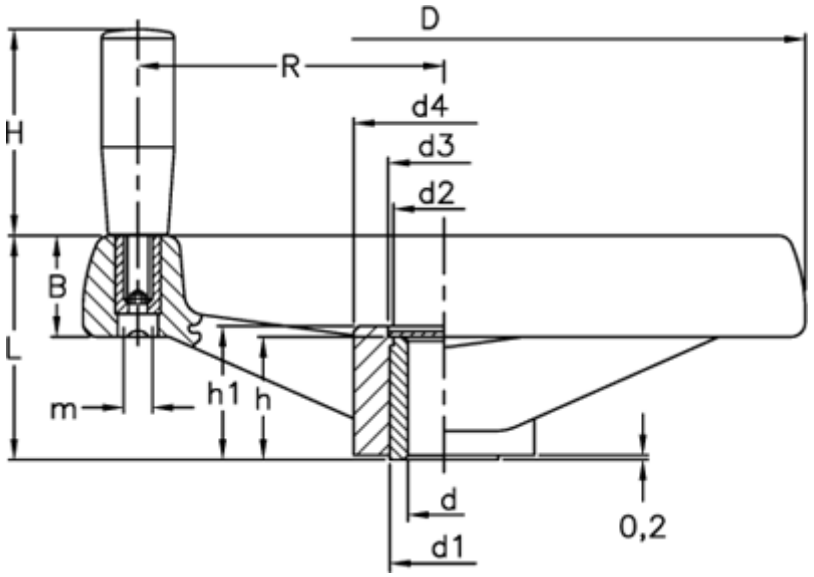

B	= 22	H	= 65
C (N m)	= 94	h	= 22
D	= 124	h1	= 25
d1	= 22	L	= 44
d2	= 20	L (J)	= 10
d3	= 21	m	= M8
d4	= 31	R	= 48
d H7	= 12		

Product drawings and brochures of any kind may contain errors for which Brd. Klee A/S cannot be liable.